CO_2 Sensors

Low Power Range—COZIR® LP

FEATURES

- Very low power / energy consumption—3mW
- Measures up to 1% CO_2 concentration
- Low profile, miniature format; vibration and shock resistant
- Solid-state; no moving parts, no heated filaments
- Self-calibrating[a]
- Digital (UART) output
- > 15 years lifetime

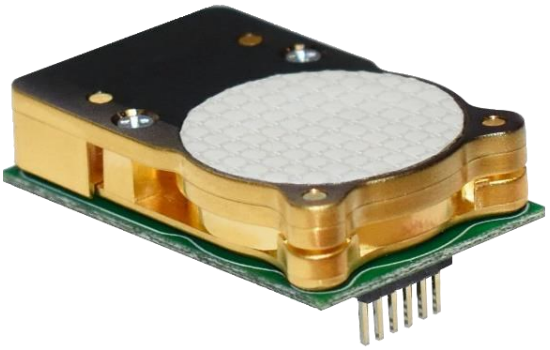

Supply Voltage	Power Consumption	Operating Temp	Output Digital	Response Time
3.3 V VOLTAGE	Max 3mW POWER	0°C to +50°C TEMPERATURE -25°C to +55°C TEMPERATURE	TTL	30s to 3m

BENEFITS

- Ideal for very low power and battery applications
- Up to 50X lower power than typical NDIR CO_2 sensors
- Low maintenance
- Suitable for wireless, portable, wearable and self-powered systems

TECHNICAL SPECIFICATIONS

Supply voltage[b]	3.25—5.5V_{DC} (3.3V recommended)
Current	<1mA (average) 33mA Peak
Power consumption[b]	3mW
Output Type	3.3V TTL level UART
Temperature	
Operating:	0°C to +50°C (standard) -25°C to +55°C (extended)
Storage:	-30°C to +70°C
Humidity	0—95% Rh, non-condensing
Start-up time[c]	1.2s

CO_2 MEASUREMENT SPECIFICATIONS

Sensing method	Non-dispersive infrared (NDIR) absorption
Sample method	Diffusion
Measurement range	0—2000ppm, 0—5000ppm, 0—1% CO_2
Accuracy[d]	±45ppm / ±3% of reading
Calibration	Auto-calibration[e]
Non linearity	< 1% of FS
Pressure dependence[f]	0.13% of reading per mbar in normal atmospheric conditions
Operating pressure range[g]	500mbar—10bar
Response time[h]	30s—3mins (configurable via filter and application) Reading refreshed twice per sec.

NOTES

a) Auto calibration enabled by default. For correct operation, the sensor must experience CO_2 concentration close to fresh air during a 24-hour period.
b) Power measurements for standard CO_2 sensor with 2 readings per second.
c) Time to a valid reading is determined by digital filter setting; typically 4-8 seconds.
d) All measurements are at NTP unless otherwise stated.
e) Enabled by default. For correct operation, the sensor must experience CO_2 concentrations close to fresh air at some time in an 8 day period.
f) Calibrated for 1013mbar. ISweek can supply advanced pressure correction advice when operating outside normal atmospheric conditions.
g) External pressure calibration required.
h) Response time to a step change in gas level is dependent on application/filter/flow rate/diffusion.

iSweek www.isweek.com
Add: 16/F, Bldg. #3, Zhongke Mansion, No.1 Hi-Tech S. Rd, Hi-Tech Park South, Shenzhen, Guangdong, 518067 P.R.China
Tel: + 86-755-83289069 Fax: + 86-755-83289052 E-mail: sales@isweek.com

OUTLINE DRAWING & ELECTRICAL CONNECTIONS

All dimensions shown in mm.

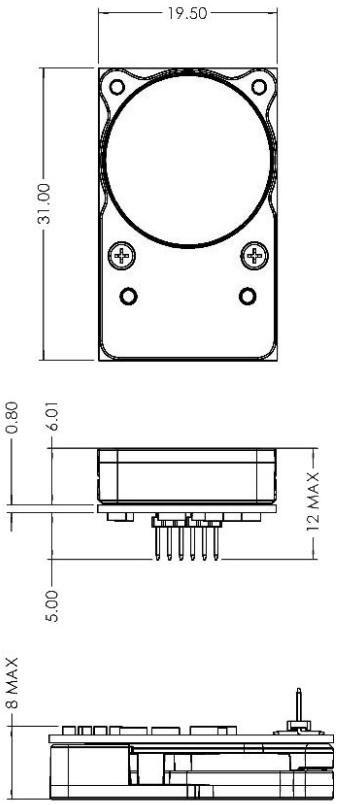

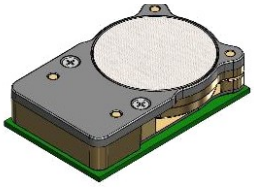

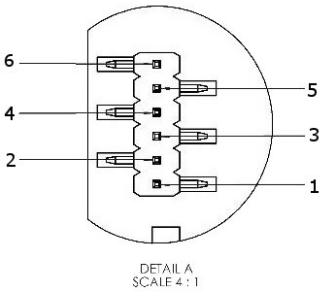

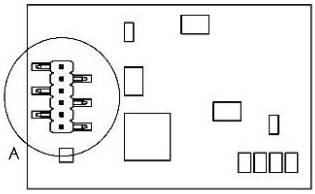

Refer to detail “A” above.

Designation	Pin	Pin	Designation
GND	1	2	V supply
Sensor Rx (In)	3	4	Sensor Tx (Out)
N/C	5	6	N/C

ORDER INFORMATION

Generate your specific part number using the convention shown below. Use only the numbers that correspond to the sensor option you require — omit those you do not.

COZIR - LP [X][X]

Temperature Range
Blank 0°C to +50°C
E -25°C to +55°C

Output Range
2000 2000ppm
5000 5000ppm
1 1%

NOTES:

- 0—1% range only available on special order.
- Sensor is intended for use with an external housing. Care must be taken to ensure the sensor is protected from dust and external light sources once installed.

EXAMPLES:

- COZIR -LP-2000 = 0°C to 50°C, with 2000ppm output range.
- COZIR -LP-E1 = Digital output, -25°C to 55°C, with 1% output range.

CAUTION

Do not exceed maximum ratings and ensure sensor(s) are operated in accordance with their requirements.
Carefully follow all wiring instructions. Incorrect wiring can cause permanent damage to the device.
Do NOT use chemical cleaning agents.

Failure to comply with these instructions may result in product damage.

INFORMATION

As customer applications are outside of Week Technology Ltd.’s control, the information provided is given without legal responsibility. Customers should test under their own conditions to ensure that the equipment is suitable for their intended application.

General Note: Week Technology Ltd. reserves the right to make changes to product specifications without notice or liability.
All information is subject to Week Technology Ltd.'s own data and considered accurate at time of going to print.

© 2018

iSweek www.isweek.com
Add: 16/F, Bldg. #3, Zhongke Mansion, No.1 Hi-Tech S. Rd, Hi-Tech Park South, Shenzhen, Guangdong, 518067 P.R.China
Tel: + 86-755-83289069 Fax: + 86-755-83289052 E-mail: sales@isweek.com